inta

WRAS APPROVED PRODUCT

## Product

### ULTRA-PRO Potable Expansion Vessels With Replaceable Membrane & Welded Bracket

Z1-1100001223 - 12L ULTRA-PRO Potable Expansion Vessel ¾" Connection

Z1-1100001220 - 12L ULTRA-PRO Potable Expansion Vessel 22mm Compression Connection

Z1-1100001955 - 18L ULTRA-PRO Potable Expansion Vessel ¾" Connection

Z1-1100001951 - 18L ULTRA-PRO Potable Expansion Vessel 22mm Compression Connection

Z1-11000024L3 - 24L ULTRA-PRO Potable Expansion Vessel ¾" Connection

Z1-11000024J1 - 24L ULTRA-PRO Potable Expansion Vessel 22mm Compression Connection

Z1-1100003505 - 35L ULTRA-PRO Potable Expansion Vessel ¾" Connection

## Technical Specification

| | |
|---|---|
| Temperature Range: | -10°C - 99°C |
| Max Working Pressure: | 10 Bar |
| Pressure Pre Charge: | 12-24L: 3 Bar / 35L: 1.5 Bar |
| Colour: | White |
| Shell & Bracket Type: | MIG Welded Carbon Steel |
| Membrane: | Zilan Butyl |
| Flanges & Connection: | Stainless Steel |

## Dimensions

| Code | Diameter ØD(mm) | Height H(mm) | Connection ØC | Installation Centres(IC) |
|---|---|---|---|---|
| Z1-1100001223 | 270 | 310 | ¾" BSP | 240 ±3 |
| Z1-1100001220 | 270 | 290 | 22mm Compression | 240 ±3 |
| Z1-1100001955 | 270 | 410 | ¾" BSP | 240 ±3 |
| Z1-1100001951 | 270 | 394 | 22mm Compression | 240 ±3 |
| Z1-11000024L3 | 270 | 483 | ¾" BSP | 240 ±3 |
| Z1-11000024J1 | 270 | 462 | 22mm Compression | 240 ±3 |
| Z1-1100003505 | 380 | 400 | ¾" BSP | 240 ±3 |

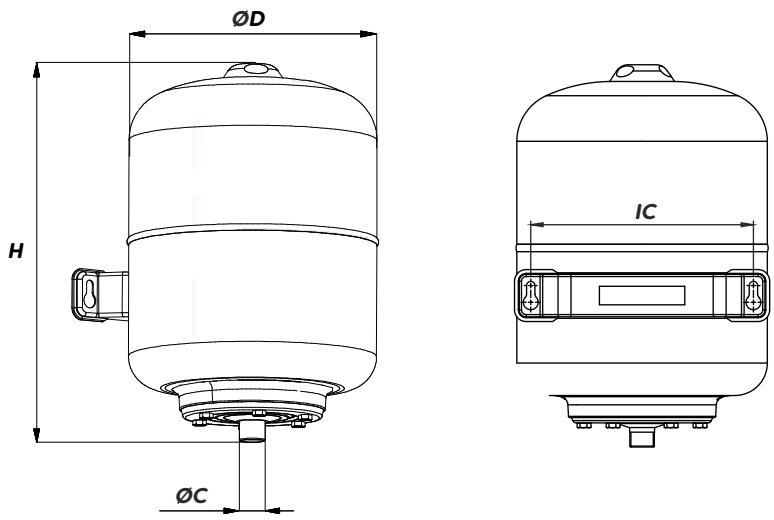


## Additional Information

5 years warranty

Suitable for multiple plumbing systems

100% factory tested

Externally finished in a hard wearing epoxy powder coating

Robust welded bracket creating easier installation

Replaceable membrane and flanges making the vessel repairable

Fully certified according to the pressure equipment directive 2014/68/EU

Scan here for more information!

Scan for Further Information

Intatec, Airfield Industrial Estate, Hixon, Stafford, ST18 0PF
T. 01889 272180 E. sales@intatec.co.uk
www.intatec.co.uk

05/25
E&OE