inta

Product

HPAFPAK2 - Installer Pack 2

Contents

Pre-built installer packs, providing everything you need in one convenient package.

- 2x - 1 1/4" F swivel x 1" M flat face extended lever ball valve (HPBV114)
- 1x - 28mm flow balancing valve 5 - 40 L/min with fill & flush (INFBV28)
- 1x - 28mm heat pump filter (IKHPMF28)
- 1x - 28mm auto by-pass valve straight (ABPS28CP)
- 2x - Anti-freeze valves (ZERO28)

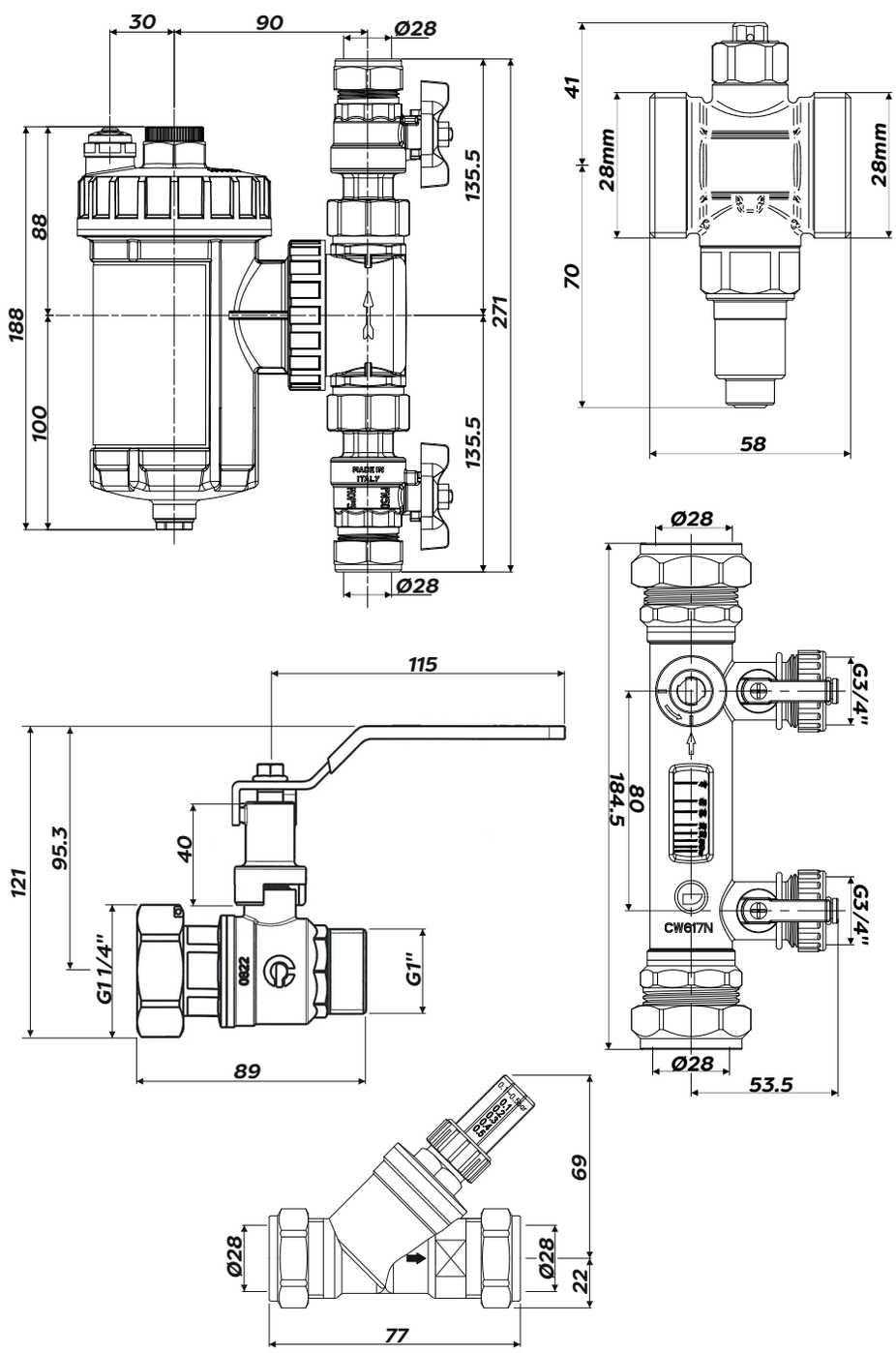

For more information on our heat pump product range please scan:

or visit :
www.intatec.co.uk

Intatec, Airfield Industrial Estate, Hixon, Stafford, ST18 0PF
T. 01889 272180 F. 01889 272181 E. sales@intatec.co.uk
www.intatec.co.uk

01/23
E&OE